ISSN 2395-1621

Hand gesture To Speech Conversion for Dumb People

#1Vinayak Wagh, #2Abhishek Kalokhe, #3Pavan Kurutage, #4Prof Shahid Tamboli

1vinayak9898@gamail.com
2abhishekdk3@gmail.com
3pavankurutage@gmail.com
4shahid.tamboli@sinhgad.edu

#1234Department of Electronics and telecommunication,

NBN Sinhgad School of Engineering, Ambegaon (BK), Pune,
Pune University, Maharashtra.

ABSTRACT

Glove based Gesture Recognition system represent one of the most important efforts aimed at acquiring hand movement data. Generally dumb people use sign language for communication but they find difficulty in communication with others who do not understand sign language. It is based on the need of developing an electronics device that can translate sign language into speech in order to make the communication between the mute communities and general public possible. A Gesture gloves is used which normal cloth driving gloves fitted with flex sensor along the length of each finger and the thumb. Dumb people can use the gloves to perform hand gesture and it will be converted in to speech so that normal people can understand their expression.

Keywords: Gesture Gloves, Flex sensor.

ARTICLE INFO

Article History

Received: 20th March 2017

Received in revised form : 20th March 2017

Accepted: 23rd March 2017

Published online : 24th March 2017

I. INTRODUCTION

Communications between deaf-mute and a normal person have always been a challenging task. About nine billion people in the world are deaf and dumb. How often we come across these people communicating with the normal world? (3) The communication between a deaf and hearing person poses to be a serious problem compared to communication between blind and normal visual people. This creates a very little room for them with communication being a fundamental aspect of human life. The blind people can talk freely by means of normal language whereas the deaf-dumb have their own manual-visual language known as sign language. (3) Sign language is a non-verbal form of intercourse which is found amongst deaf communities in world. The languages do not have a common origin and hence difficult to interpret. Deaf-Mute communication interpreter is a device that translates the hand gestures to auditory speech. A gesture in a sign language is a particular movement of the hands with a specific shape made out of them. Facial expressions also count toward the gesture, at the same time. A posture on the other hand, is a static shape of the hand to indicate a sign. Gesture recognition is classified into two main categories i.e. vision based and sensor based. The disadvantage of vision based techniques includes complex algorithms for data processing. Another challenge in image and video processing includes variant lighting conditions, backgrounds and field of view constraints and occlusion. The sensor based technique offers greater mobility. The main aim of this paper is to present a system that can efficiently translate American Sign Language gestures to both text and auditory voice. The interpreter here makes use of a glove based technique comprising of flex sensors. For each hand gesture made a signal is produced by the sensors corresponding to the hand sign the controller matches the gesture with pre-stored inputs. Training mode is offered in device so that it fits every user and accuracy is increased. The device can also be made to translate larger gestures that require single hand movement.

II. OBJECTIVE

The communication between a dumb and hearing person poses to be a serious problem compared to communication between blind and normal visual people. This creates a very little room for them with communication being a fundamental aspect of human life. The blind people can talk freely by means of normal language whereas the deaf-dumb have their own manual-visual language known as sign language. Sign language is

a non-verbal form of intercourse which is found amongst deaf/dumb communities in world.

To develop a Hand gesture to speech conversion device for Dumb people**.**

Sign language is a useful tool to ease the communication between the deaf or mute community and the normal people. Yet there is a communication barrier between these communities with normal people. This project aims to lower the communication gap between the deaf or mute community and the normal world.

To implement twelve hand gesture.

To recognize the hand gesture and related word assign for that hand gesture.

To play audio file of word & also display that respective word on LCD.

II. LITERATURE SURVEY

"Hand Gesture Recognition: A Comparative Study" by Prateem Chakraborty, PrashantSarawgi, AnkitMehrotra, GauravAgarwal , RatikaPradhan. (1)

This paper presents four very simple but efficient methods to implement hand gesture recognition namely Subtraction, Gradient, Principal Components Analysis and Rotation Invariant. First create an Image Database consisting of four different hand gesture images. Before populating the database for an images of various gesture categories in Hand Gesture Recognition system, each image was first processed i.e., the images were converted to 8-bit grayscale images and filtering was performed to minimize any noise present in the images. The method mentioned above were applied on the input test images captured form the sensor device of the system to find the suitable match form the database. The methods used were successful to retrieve the correct matches. The results based on speed and accuracy was analyzed.

"Hand Gesture Recognition Based on Karhunen-Loeve Transform" by Joyeeta Singha1, Karen Das2 (2)

This paper aims toward a system based on KL Transform to recognize different hand gestures. The system consists of five steps: skin filtering, palm cropping, edge detection, feature extraction, and classification. Firstly the hand is detected using skin filtering and palm cropping was performed to extract out only the palm portion of the hand. The extracted image was then processed using the Canny Edge Detection technique to extract the outline images of palm. After palm extraction, the features of hand were extracted using K-L Transform technique and finally the input gesture was recognized using proper classifier. In this system 10 different hand gestures, and recognizing rate obtained was 96%. Hence we propose an easy approach to recognize different hand gestures.

"The Amazing Digital Gloves that gives voice to voiceless." By Praveenkumar S Havalagi, Shruthi (3)

Glove-based systems represent one of the most important efforts aimed at acquiring hand movement data. Generally dumb people use sign language for communication but they find difficulty in communicating with others who do not understand sign language. It is based on the need of developing an electronic device that can translate sign language into speech in order to make the communication take place between the mute communities with the general public possible, a Wireless data gloves is used which is normal clothdriving gloves fitted with flex sensors along the length of each finger and the thumb. Mute people can use the gloves to perform hand gesture and it will be converted into speech so that normal people can understand their expression. This paper provides the map for developing such a digital glove. It also analyzes the characteristics of the device and discusses future wok. A foremost goal of this paper is to provide readers with a basis for understanding glove system technology used in biomedical science.

" Hand gesture recognition and voice conversion system for dumb people" by V.Padmanabhan, M.Sornalatha. (4)

In our country around 2.78% of peoples are not able to speak (dumb). Their communications with others are only using the motion of their hands and expressions. We proposed a new technique called artificial speaking mouth for dumb people. It will be very helpful to them for conveying their thoughts to others. Some peoples are easily able to get the information from their motions. The remaining is not able to understand their way of conveying the message. In order to overcome the complexity the artificial mouth is introduced for the dumb peoples. This system is based on the motion sensor. According to dumb people, for every motion they have a meaning. That message is kept in a database. Likewise all templates are kept in the database. In the real time the template database is fed into a microcontroller and the motion sensor is fixed in their hand. For every action the motion sensors get accelerated and give the signal to the microcontroller. The microcontroller matches the motion with the database and produces the speech signal. The output of the system is using the speaker. By properly updating the database the dumb will speak like a normal person using the artificial mouth. The system also

includes a text to speech conversion (TTS) block that interprets the matched gestures.

"Hand Gesture Recognition and Voice Conversion System for Differentially Able Dumb People" by Shoaib Ahmed V. (5)

Generally dumb people use sign language for communication but they find difficulty in communicating with others who don't understand sign language. This project aims to lower this barrier in communication. It is based on the need of developing an electronic device that can translate sign language into speech in order to make the communication take place between the mute communities with the general public possible. A Wireless data gloves is used which is normal cloth driving gloves fitted with flex sensors along the length of each finger and the thumb. Mute people can use the gloves to perform hand gesture and it will be converted into speech so that normal people can understand their expression.

III. PROPOSED SYSTEM

Applications:

1. Using this system dumb people can communicate with normal people easily.
2. The person who is dumb and wants to communicate with shopkeeper can use this device.
3. If any dumb person wants to work at any shop or mall can use this device to communicate with customers.

Future Scope:

- A handy and portable hardware device with built-in translating system, speakers and pair of gloves can be manufactured so that a deaf and dumb person can communicate to any normal person anywhere.
- Perfection in monitoring and sensing of the dynamic movements involved in "Microcontroller and Sensors Based Gesture Vocalizer".
- Designing of wireless transceiver system for "Microcontroller and Sensors Based Gesture Vocalizer".

About nine billion people in the world are deaf and dumb. How often to come across these people communicating with the normal world? The communication between a dumb and hearing person poses to be a serious problem compared to communication between blind and normal visual people. This creates a very little room for them with communication being a fundamental aspect of human life. The blind people can talk freely by means of normal language whereas the deaf-dumb have their own manual-visual language known as sign language. Sign language is a non-verbal form of intercourse which is found amongst deaf communities in world. The sign language is only understandable to the person who knows that language.

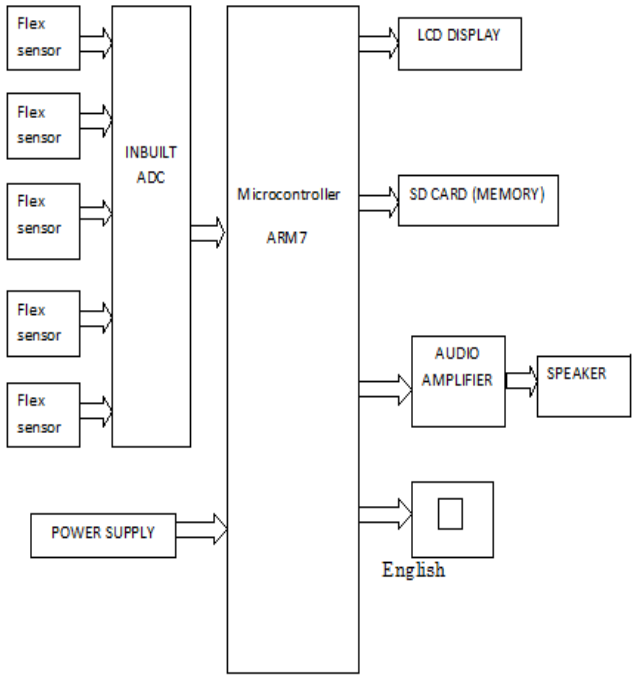

Fig 1. Block Diagram

ARM7(L PC 2138):

Microcontroller ARM-7 has flash memory. The programming of this microcontroller is very easy. It is used to interface with gate motor driver.

Some ARM7 cores are obsolete. One historically significant model, the ARM7DI is notable for having introduced JTAGbased on-chip debugging; the preceding ARM6 cores did not support it. The "D" represented a JTAG TAP for debugging; the "I" denoted an ICEBreaker debug module supporting hardware breakpoints and watch points, and letting the system be stalled for debugging. Subsequent cores included and enhanced this support.

It is a versatile processor designed for mobile devices and other low power electronics. This processor architecture is capable of up to 130 MIPS on a typical 0.13 µm process. The ARM7TDMI processor core implements ARM architecture v4T. The processor supports both 32-bit and 16-bit instructions via the ARM and Thumb instruction sets.

FLEX SENSOR:

Flex sensors are resistive carbon elements. When bent, the sensor produces a resistance output correlated to the bend radius. The variation in resistance is approximately 10 to 30 KOhm's. An unflexed sensor has

10Kohm resistance and when bent the resistance increases to 30Kohm at 90 degree. The sensor is about ¼ inch wide, 4-1/2 inches long.

The sensor is incorporated in device using a voltage divider network. Voltage divider is used to determine the output voltage across two resistances connected in series i.e. basically resistance to voltage converter. The resistor and flex forms a voltage divider which divides the input voltage by a ratio determined by the variable and fixed resistors.

- Flex sensor are sensor that change in resistance depending on the amount of bend on the sensor.
- Flex sensor convert the change in bend to electrical resistance- the more the bend, the more the resistance value.
- Flex sensor are usually in the form of a thin strip from 1”-5” long that vary in resistance.
- Flex sensor are analog resistors.
- Flex sensor work as variable analog voltage dividers
- Inside the Flex sensor are carbon resistive elements within a thin flexible substance. More carbon means less resistance.
- When the substrate is bent the sensor produces a resistance output relative to the bend radius.

IV. HARDWARE AND SOFTWARE IMPLEMENTATION

Hardware implementation:

Microcontroller ARM 7(LPC 2138):

The LPC2138 microcontrollers are based on a 16/32-bit ARM7TDMI-S CPU with real-time emulation and embedded trace support, that combine the microcontroller with 32 kB, 64 kB, 128 kB, 256 kB and 512 kB of embedded high-speed flash memory. A 128-bit wide memory interface and unique accelerator architecture enable 32-bit code execution at maximum clock rate. For critical code size applications, the alternative 16-bit Thumb mode reduces code by more than 30 % with minimal performance penalty.

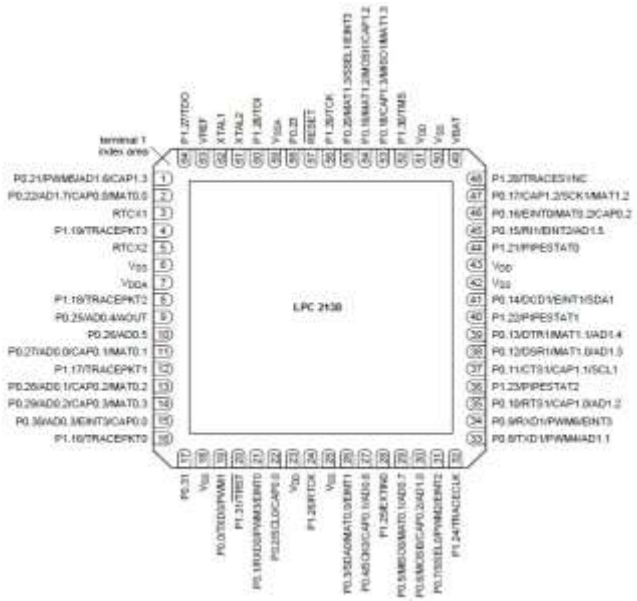

Liquid Crystal Display:

A LCD is a thin, Flat device made up of many number of colours or monochrome pixels arrayed in front of light source or reflector. It is prized by engineers because it uses small amount of power, and is therefore suitable for in battery-powered electronic devices. Each pixel (picture element) consist of column of liquid crystal molecules suspended between two transparent electrodes, and two polarizing filters. The axes of polarity of which are perpendicular to each other. Without the liquid crystal between them, light passing through one would be blocked by the other. The liquid crystal twists the polarization of light entering one filter to allow it to pass through the other.

Audio System:

Audio system is nothing but a speaker system which is connected at the output of the system for announcement purpose. As per the system application, per the visual based guide, the respective saved audio file is played using a speaker system.

SD Card:

SD card is basically is used as an storage device which will required to store the required data. The system database can be used to store in sd card in the form of .wav file and can be accessed from that whenever it is required. Sd card is interfaced with the system using a protocol called SPI protocol.

Software implementation:

For code writing: Matlab 7.6, basic “C”

For simulation : Proteus 7.8

Proteus* is a software technology that allows creating clinical executable decision support guidelines with little effort. Indeed, it should be **fun** creating your own guidelines. Once a guideline for a condition has been created, it can be executed to provide stepwise advice for any patient having that condition. This site is dedicated to the Proteus executable guidelines model, tools based on the Proteus approach and the automated guidelines created using those tools.

V. CONCLUSION

Sign language is a useful tool to ease the communication between the deaf or mute community and the normal people. Yet there is a communication barrier between these communities with normal people. This project aims to lower the communication gap between the deaf or mute community and the normal world. This project was meant to be a prototype to check the feasibility of recognizing sign language using sensor gloves. With this project the deaf or mute people can use the gloves to perform sign language and it will be converted in to speech so that normal people can easily understand. The main feature of this project is that the gesture recognizer is a standalone system, which is applicable in daily life.

REFRENCES

[1] Hand Gesture Recognition: A Comparative StudyPrateemChakraborty, PrashantSarawgi, Ankit Mehrotra, GauravAgarwal, RatikaPradhan, Proceedings of the International MultiConference of Engineers and Computer Scientists 2008 Vol IIMECS 2008, 19-21 March, 2008, Hong Kong

[2] Hand Gesture Recognition Based on Karhunen-Loeve Transform Joyeeta Singha1, Karen Das21,2Department of Electronics and Communication Engineering 1,2Assam Don Bosco University, Guwahati, Assam, India. Mobile & Embedded Technology International Conference 2013

[3] International Journal of Advances in Engineering & Technology, Mar. 2013.©IJAET ISSN: 2231-1963 THE AMAZING DIGITAL GLOVES THAT GIVE VOICE TO THE VOICELESS. Praveenkumar S Havalagi, ShruthiUrfNiveditaM.Tech (VLSI), Department of ECE, SIET, Bijapur, India B.E (ECE), Department of ECE, SIET, Bijapur, India.

[4] "Hand gesture recognition and voice conversion system for dumb people" by V.Padmanabhan, M.Sornalatha. International Journal of Scientific & Engineering Research, Volume 5, Issue 5, May-2014 427 ISSN 2229-5518

[5] "Hand Gesture Recognition and Voice Conversion System for Differentially Able Dumb People by SHOAIB AHMED. VDepartment of Electronics and Communication Submitted to: Tech Expo-The Global Summit, London 2012

[6] Seong-Whan Lee, "Automatic Gesture Recognition for Intelligent Human-Robot Interaction" Proceedings of the 7th International Conference on Automatic Face and Gesture Recognition (FGR'06) ISBN # 0-7695-2503-2/06

[7] Md. Al-Amin Bhuiyan, "On Gesture Recognition for Human-Robot Symbiosis", The 15th IEEE International Symposium on Robot and Human Interactive Communication (RO-MAN06), Hatfield, UK, September 6-8, 2006, pp.541-545

